1.0 FACILITY OVERVIEW

The Kabirwala Power Generation Complex is a combined cycle, power generation plant located in Kabirwala, Pakistan. The primary components of the plant consists of two Westinghouse 251B Combustion Turbine Generators with an integrated Westinghouse WDPF II distributed control system; two, multiple pressure Zurn Industries Heat Recovery Steam Generators with integral duct burners; and a Westinghouse Condensing Steam Turbine. The plant has a net electrical output of 151 MW and a heat rate of 7390 BTU/kWhr (LHV) with duct firing and 144 MW and a heat rate of 7092 BTU/kWhr (LHV) without duct firing, both at 77°F ambient temp.

The function of the Kabirwala Power Generation Complex is to generate electricity supply to the WAPDA power grid. The plant is located at 450 feet (138 meters) above sea level. Flow Diagrams FD1-4 illustrate the primary energy and mass balance diagrams, illustrating the flowpaths through the Power Plant. The power plant is very self-sufficient, with only the two sources of fuel gas being supplied to the plant. Well Water, pumped from the plant three underground wells, is used as the main supply of water for cooling, potable water, fire water and demineralized water.

As noted above and as shown on Flow Diagrams FD1-4, natural gas and low BTU gas from are provided as the primary source of fuel. The low BTU gas has combustion properties similar to that of natural gas and is used as the primary fuel. Natural gas is used as a secondary fuel source for flame stabilization. Both fuel sources are mixed in the burner of the Gas Turbine, which controls the firing rate of the gas turbine. The combustion turbines are designed to burn natural gas or a combination (mixture) of both gases. Both gas supplies are provided at a high enough pressure to support combustion within the combustion turbine. Neither fuel supply requires compression. Both gases, however, are scrubbed of contaminants prior to use in the combustion turbines and duct burners. Low BTU gas is heated to 330°F.

The HRSG duct burners are also designed to burn both the Low Btu gas and natural gas. However, only one gas (selected as the primary fuel) can be burned at a time. The gas supplies come directly from the inlet at the plant and are supplied to the duct burner skids. Both gases passes through a pressure reducing valve, resulting in a nominal supply pressure of approximately 30 psig to the duct burners.

The generation of electricity from within the Power Plant occurs as several stages of 'energy conversion' takes place. The energy conversion process is broken down in many facets:

- Within the combustion turbines, the chemical energy of the fuel (low BTU & natural gas) is converted to thermal energy (heat) through the process of combustion. The majority of this heat is converted to mechanical energy as it flows across the turbine blading, causing the turbine shaft to rotate.
- The mechanical energy of the turbine is transmitted to the associated generator through a drive shaft. Within the generator, mechanical energy is converted into electrical energy.
- Exhaust heat from the combustion turbine passes through the HRSG. Within the HRSG, the thermal energy from the turbine exhaust is used to convert water into superheated steam. The steam is routed to a condensing steam turbine.
- The energy from the steam causes the turbine shaft to rotate. This conversion of heat energy into mechanical (rotational) energy is the first transformation. The second conversion is the transformation of mechanical energy to electrical energy in the steam turbine electrical generator.

The duct burners represent a second phase of energy conversion. Operation of the duct burners provides an additional heat source to the HRSG to aid in increased steam production. In the unfired mode, the HRSGs are capable of supplying 323,000 pounds per hour (pph) of steam to the steam turbine; each providing 162,000 pph of steam individually. During duct firing, the output of each HRSG can be increased to 189,000 pph. This increases the electrical production from the steam turbine generator from 48 MW to over 55 MW.

Prior to leaving each HRSG, the steam passes through a superheater section which increases the steam temperature above the point of saturation. Superheating of saturated steam has several advantages. One of the most important and critical factors that affect the operating efficiency of a steam turbine is the steam temperature. The higher the temperature, the higher the efficiency. However, the strength of steel decreases very rapidly at high temperatures so that there is a limit to the maximum operating temperature. In addition, temperature changes affect the rate of thermal expansion of the close tolerance turbine equipment, therefore it is required to maintain a nearly constant steam supply temperature, despite load swings. The HP outlet steam temperature is controlled by an interstage attemperator and temperature controller. The attemperator is situated in the steam flow piping prior to final steam heating. The attemperator protects the steam turbine from temperature excursions which could result in serious equipment damage.

The steam/water cycle at the plant begins and ends at the condenser, at the outlet of the turbine. Exhaust steam from the steam turbine final stage is passed over tubes, where the steam is condensed and the waste heat is routed to the cooling tower for removal. The condensate, at the bottom of the condenser, is pumped to the deaerator, where all of the entrained oxygen is removed. The condensate becomes feedwater and is pumped back into the drum for re-heating and use by the steam turbine.

Makeup water for the losses incurred by the steam cycle is provided by a demineralized water system. The demineralized water system removes the solids from the raw well water pumped from underground wells.

2.0 GAS TURBINE AND STEAM TURBINE SYSTEMS

2.1 Gas Turbine Generator

The Gas Turbine Generator consists of a number of subsystems that work together to ensure safe operation of the unit. The Gas Turbine Generator is a device for converting part of a fuel's chemical energy into useful available mechanical power. This conversion process is known as the Brayton Cycle. Air is drawn into a multi-stage, axial compressor. The compressed air is routed to a combustion area where fuel (in the proper ratio) is injected. The combustion of the fuel adds heat energy to the air.

Combustion is initially started by a spark plug or flame ignitor. Once a stable flame is established, combustion is self-sustained by a continuous flow of air and fuel, and the ignitor is shutdown. The combustion process raises the gas temperature to a substantially high temperature.

The hot, high pressure exhaust gas (no longer air) is ducted to a turbine section, where it expands to exhaust pressure. In the expansion process, energy is removed from the gas which causes the turbine shaft to rotate. In addition, the compressor and an electrical generator are also driven by the turbine shaft.

After leaving the last stage of the combustion turbine, the exhaust gas still has a substantially high temperature. Since there is still heat energy in the gas, the heat is put to use in a Heat Recovery Steam Generator, where steam is produced. This helps to increase the overall thermal efficiency of the turbine cycle.

The Westinghouse 251B combustion turbine consists of the a number of systems which support the combustion turbine operation. These are:

- Gas Turbine Proper - The gas turbine proper has the compressor, the rotor, the combustor, and power turbine. Additionally, the exhaust hood is provided to direct the exhaust gasses to the HRSG.
- Inlet Air System - Inlet air is drawn into the gas turbine compressor, as the primary mass for the gas turbine. The air is filtered before flowing into the turbine to prevent damage and degradation of the compressor and combustion section of the gas turbine. It is equipped with a self-cleaning filter. An inlet air evaporative cooler is provided at the inlet to the filter. This cooler is used to cool the air, causing it to become more dense, which creates more mass flow, and more power.

- Bearing Seal Air System - Bearing seal air is bled from the compressor to seal the various sections of the gas turbine to prevent leakage along the gas turbine shaft and to help minimize vibrations.
- Cooling Air System - The gas turbine extracts air from the compressor discharge which is used as cooling air. The cooling air system provides direct cooling of the components exposed to the hot gas path temperatures that are higher than the material temperature limits.
- Fuel System - Fuel Gas, natural and low BTU gas, is the fuel used in the combustion turbine. The fuel gas is combusted with the compressed air to provide the heated mass flow, which drives the turbine.
- Lube Oil, Trip Oil System - Lube oil is used as the means to both lubricate and cool the gas turbine bearings. The oil is provided as the actuating means for the fuel control valves, to trip the fuel in the event of a gas turbine trip.
- Instrument Air System- Instrument air is provided as actuating air to many of the gas turbine control valves. The air, bled from the compressor, is dried and routed to the actuating cylinders for the valves.
- Cooling Water System - Cooling water is provided to remove the heat generated by the bearings, combustion turbine proper, and electrical generator. The warm cooling water is cooled by the closed loop cooling water heat exchangers, which release the heat to the cooling tower.
- Water Wash System - To enhance and maintain efficiency and performance of the gas turbine, a water wash system is provided to clean the compressor blades. These blades, if left uncleaned, will accumulate dust and particles, which can lead to blade damage.
- Starting System and Reduction Gear - In order to bring the unit up to self-sustaining combustion, a diesel starting package is provided to break the turbine free from standstill and to ramp the turbine up to firing speed. Once flame is established, the diesel starting package is un-clutched from the turbine and shutdown.
- Fire Protection System - A carbon dioxide fire protection system is provided to all of the enclosures which support the gas turbine operation. The carbon dioxide is release in two phases, an initial discharge, which extinguishes the fire, and an extended discharge, which maintains a blanket on the equipment, preventing fire from re-flashing.
- Electrical Generator - The electrical generator produces the electrical power for the grid. This is the final product generated at the power plant. The power is produced at 11.5 kV at 50 hz.
- Turbine Controls - The controls are used by the operator to safely and efficiently startup, operate, shutdown, and trip the unit. The controls not only provide digital input for the operation of the turbine including startup and shutdown, but in regulates the amount of fuel to the combustor based on desired load setpoints.

2.2 Steam Turbine Generator

The Steam Turbine and Generator consists of a number of subsystems that work together to ensure safe operation of the unit. The Steam Turbine is a device for converting part of a steam's heat energy into useful available mechanical power. This conversion process is known as the Rankine Cycle. Hence, since this power plant uses both the Brayton Cycle and the Rankine Cycle, it is termed a Combined Cycle Power Plant.

The energy in the steam, measured in enthalpy, is converted into mechanical (rotational) energy to drive an electrical generator. The steam turbine actually accomplishes this conversion in a series of two steps. The first step is the expansion of the steam in a nozzle, which coverts some of the heat and pressure energy into the kinetic energy of a steam jet. In the second step, the kinetic energy of the jet is used with moving turbine blades that change the kinetic energy into useful mechanical (rotational) energy.

By continually expanding the steam between the turbine rotor blades, in essence, the outlet of the first stage is the inlet to the second stage, most of the potential energy from the steam is converted to useful

work. This is the primary purpose of the multiple stages, for if there was only one stage, the turbine blade would have to be significantly large to convert the same amount of energy into useful work.

The Steam Turbine consists of the a number of systems which support the turbine operation. These are:

- Steam Turbine Proper - The actual turbine, with nozzles, turbine blades, rotor, etc. This device converts the energy in the steam (pressure and heat) into mechanical rotation energy, which rotates the electrical generator.
- Steam Admission Valves - The steam valves which admit the main steam to the turbine. A main steam stop valve is used as an isolation valve, which trips shut, closing off the main steam supply, in the event of a turbine trip. A governor valve is used to control the amount of steam to the turbine to meet loads. An induction valve is provided to admit low pressure steam to the turbine to meet steam turbine load.
- Lube Oil System - A system of components which supplies lube oil to the turbine bearings for cooling and lubrication. The oil is also used as the means to actuate the Steam Admission Valves.
- Gland Steam System - Steam is the sealing medium which is used along the turbine shaft to prevent the escape of high pressure steam along the length of the rotor. The sealing steam is provided from the low pressure steam system and is collected drawn into the gland steam condenser, which liberates non-condensible gases from the steam. The condensate is reused in the system.
- Exhaust Hood Spray / Drain System- The exhaust hood spray is used to lower the temperature of the steam entering the condenser. If the steam entering the temperature were too high, the condenser would undergo thermal shock and potential pressurization. The exhaust hood assists in collapsing the steam leaving the final stage of the turbine, reducing the amount of backpressure on the turbine.
- Trip System - The trip system uses the control oil to both actuate the valves and to trip the valves in event of a turbine trip.
- Turning Gear - The turning gear is provided to rotate the shaft while the turbine is shut down. This prevents the rotor from bending. Bending is very detrimental to the turbine internals due to the close clearances between the turbine nozzles and blades. Also during startup and shutdown, the turning gear is engaged to ensure even heating and cooling along the entire turbine rotor.
- Electrical Generator - The electrical generator produces the electrical power for the grid. This is the final product generated at the power plant.
- Turbine Controls - The controls are used by the operator to safely and efficiently startup, operate, shutdown, and trip the unit. The controls not only provide digital input for the operation of the control oil, but also monitor vibration, expansion of the rotor, and control of the auxiliary equipment.

3.0 HRSG Systems

3.1 Condensate System

The Condensate System provides a means of converting steam from turbine exhaust into condensate for reuse in the water and steam cycle. The primary component of the Condensate System, the condenser, operates under a vacuum to increase the energy transfer (and thus efficiency) from the steam flowing through the turbine stages. The condenser also serves as a point of collection for additional steam and condensate sources. After collecting the condensate, four condensate pumps return the condensate to the deaerator, for use in the Feedwater System.

The Condensate System accomplishes the following:

1) Condenses steam turbine exhaust
2) Pumps the condensate from the hotwell to the deaerator
3) Provides a cooling medium to the inter/after condenser and the gland seal condenser

4) Removes air and non-condensible gasses from the shell side of the condenser
5) Pre-heats condensate before it is returned to the deaerator.

The Condensate System is shown on P&ID P17, P19 and 29. Figure 1 is a simplified flow diagram of the Condensate System illustrating all major components and the system flowpath.

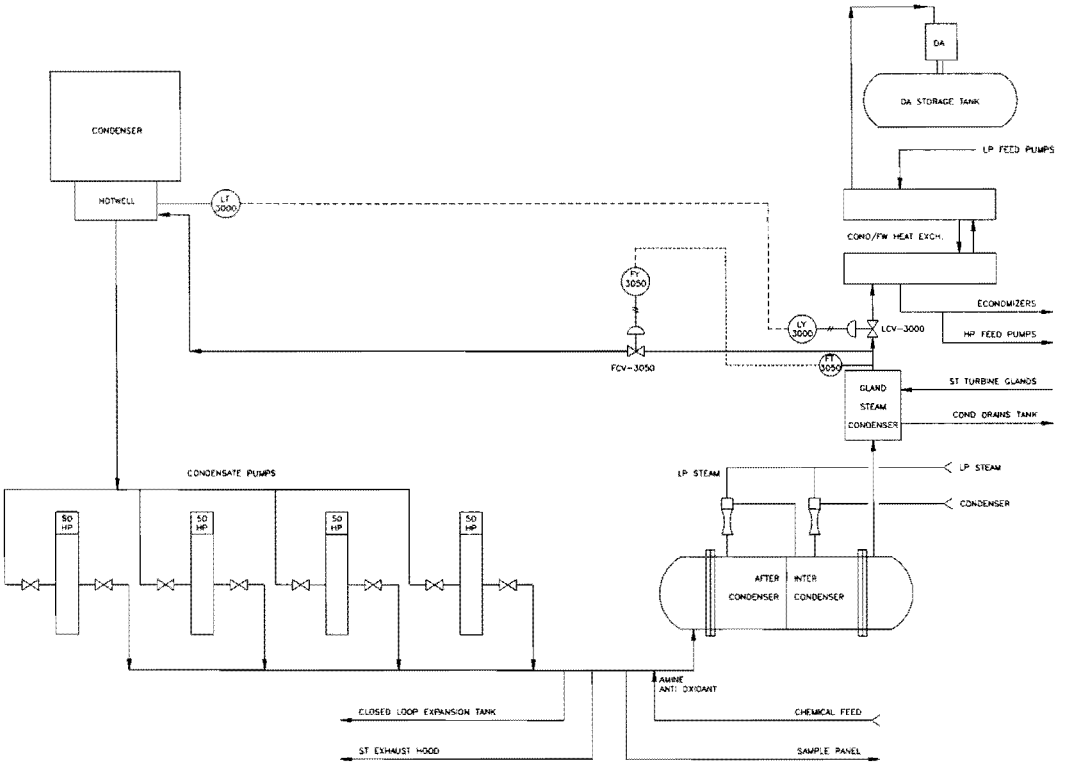

Figure 1 - Condensate System Simplified Diagram

The Condensate System consists of the following major components:

- Condenser
- Condensate Pumps
- Condenser Air Removal System
- Gland Seal Steam Condenser
- Condensate / Feedwater Heat Exchanger
- Condensate Drains Tank

3.2 Feedwater System

The Feedwater System provides pure deaerated water to the Heat Recovery Steam Generators (HRSGs) for use in generating steam. Within the Feedwater System, the water is de-oxygenated and then pumped to the HRSG at a controlled rate in an effort to maintain correct water level in both the low pressure and high pressure steam drums.

The Feedwater System is shown on P&IDs P18 & P19. Figure 2 is a simplified flow diagram of the Feedwater System illustrating all major components and the system flowpath.

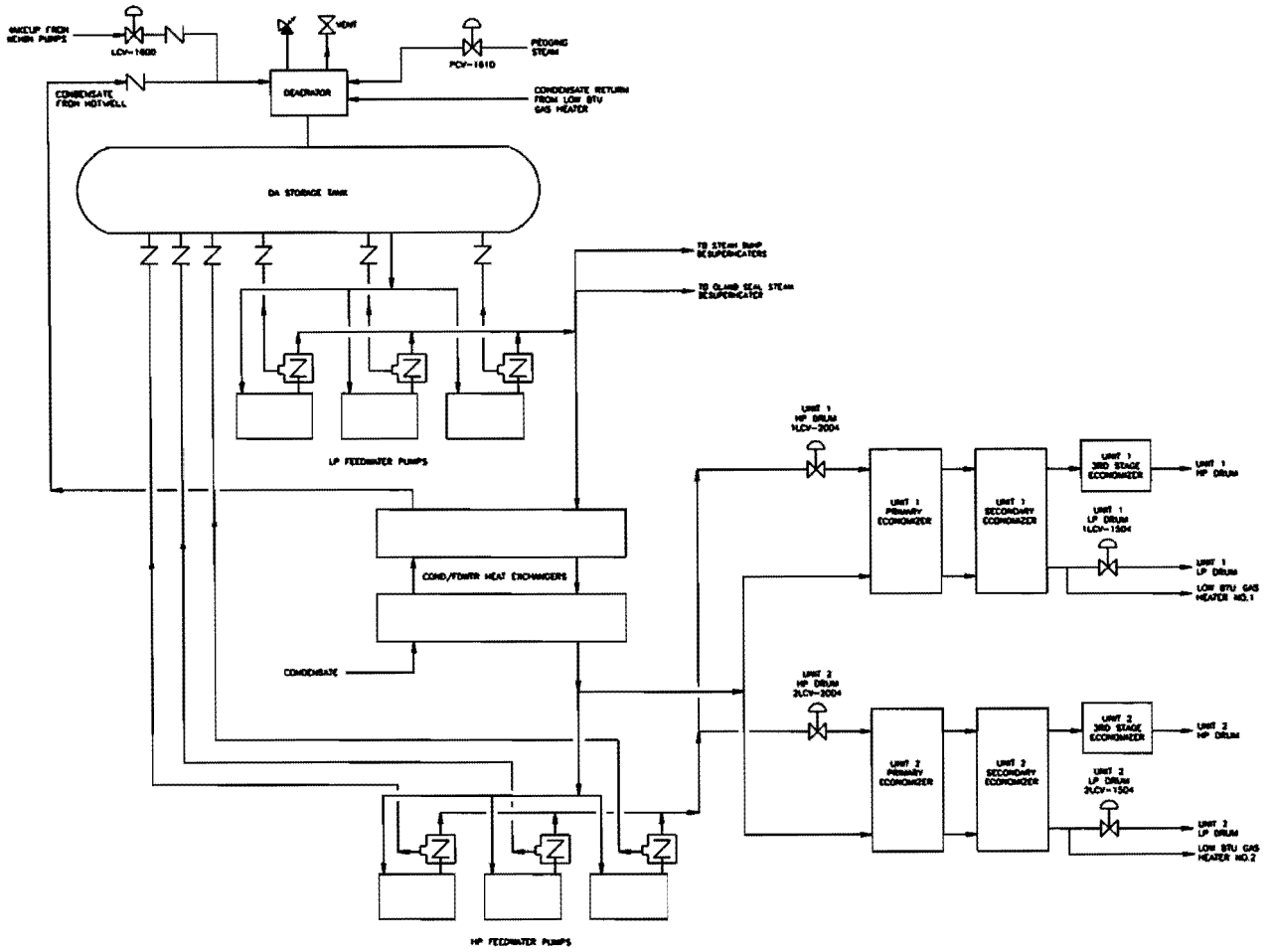

Figure 2 - Simplified Feedwater System Diagram

As illustrated in Figure 2, the feedwater system consists of the deaerator, the deaerator storage tank, condensate/feedwater heat exchangers, and the low pressure and high pressure feedwater pumps. The deaerator receives return condensate from the Condensate System and makeup water from the Demineralized Water System. To function properly, the deaerator requires a continuous flow of low pressure steam through the deaerator vessel. The pegging steam serves to both preheat and de-oxygenate the feedwater within the deaerator.

The feedwater system consists of two distinct independent systems. This is the low pressure system which maintains level in the low pressure steam drum and the high pressure system which maintains level in the high pressure steam drum.

The Feedwater System consists of the following major components:

- Deaerator
- LP Feedwater Pumps No. 1, 2, 3
- HP Feedwater Pumps No. 1, 2, 3

3.3 HRSG

The Fauji Kabirwala Power Generation Complex is equipped with two individual Heat Recovery Steam Generators (HRSGs), each located at the exhaust end of the combustion turbines. During plant operation, the combustion turbines discharge a high volume of exhaust flue gas containing a considerable amount of thermal energy. The HRSGs provide for reclamation of this exhausted thermal energy, at which point it is used for generating HP and LP superheated steam for use in the steam turbine generator. Efficient reclamation of the combustion turbine exhaust prevents wasted energy, provides the plant with its 'combined cycle' status, and contributes to a significant increase of overall plant efficiency.

The HRSGs are shown on P&IDs P5 through P11. Figure 3 is a simplified flow diagram of an HRSG illustrating all major components and the system flowpath.

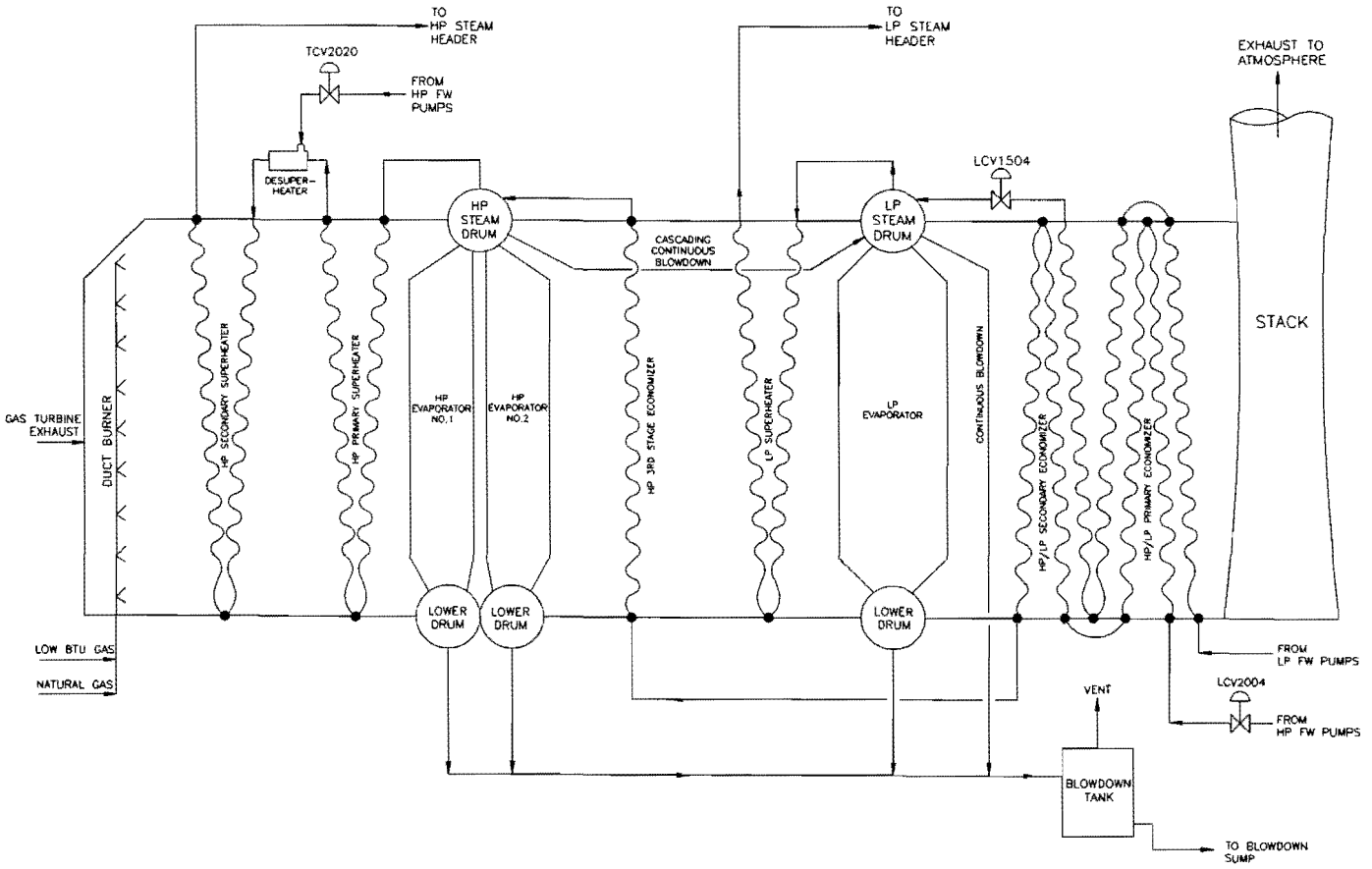

Figure 3 - HRSG Simplified Diagram

The HRSGs are dual pressure units which provide superheated HP and LP steam to a common steam turbine generator. Each HRSG is supplementally fired with a duct burner also capable of burning both natural gas and low Btu gas. Although the HRSGs can operate solely on heat from the gas turbine exhaust, the additional heat of the duct burner provides increased steam production resulting in additional electrical output from the steam turbine generator.

The LP circuit of each HRSG is designed to produce:

- 37,615 lbs/hr of superheated steam at 466°F and 150 psig in the *unfired* mode.
- 38,210 lbs/hr of superheated steam at 467°F and 150 psig in the *fired* mode.
- 63,000 lbs/hr of 360°F water takeoff at the exit of the secondary economizer (to low Btu gas heaters).

The HP circuit of each HRSG is designed to produce:

- 162,000 lbs/hr of superheated steam at 913°F and 1025 psig in the *unfired* mode.
- 189,000 lbs/hr of superheated steam at 931°F and 1192 psig in the *fired* mode.

The HRSG's each consists of the following major sub-sections and components:

- HRSG Structure
- Low Pressure Circuit
- High Pressure Circuit
- Blowdown Tanks

3.4 Steam System

The Steam System is provided to transport steam generated in the High Pressure (HP) and Low Pressure (LP) steam drums of the two HRSGs for use by the steam turbine. The Steam System also provides a source of useable LP steam to various loads within the power generation facility. During initial plant startup, shutdown, or during a trip condition, the system is equipped to route about30% of the steam load to the surface condenser while maintaining sufficient pressure on the LP and HP steam headers.

The Steam System is shown on P&IDs P13 and P14. Figure 4 is a simplified flow diagram of a system illustrating all major components and the overall system flowpath.

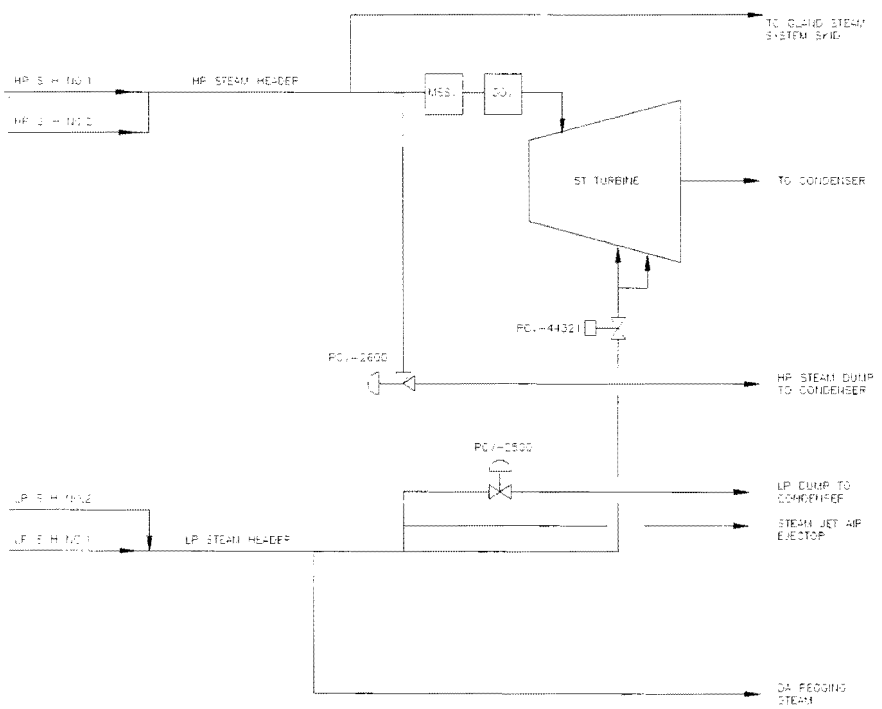

Figure 4 - Steam System Simplified Flow Diagram

The steam system has two primary flowpaths; 1) HP superheated steam supply to the steam turbine HP throttle valve and HP dump line to the condenser, and 2) LP superheated steam supply to the LP induction throttle valve, steam supply to auxiliaries, and LP dump line to the condenser.

In the event of a steam turbine trip, the main steam stop valve and induction valve will slam shut, cutting off steam to the turbine. This steam must have a place to go. A steam dump line on both the HP steam line and LP steam line routes the steam directly to the condenser, through a steam diffuser and the individual steam sky valves. The condenser is protected from the thermal shock of the high temperature, high pressure steam through the use of attemporators, upstream of the diffuser. The condenser is sized to accept all the steam production from both HRSG drums.

The Steam System consists of the following major headers:

- HP Steam Supply to Steam Turbine
- LP Steam Supply to Steam Turbine
- LP Steam Supply to Auxiliary Systems

3.5 Boiler Chemical Feed System

The Boiler Chemical Feed System transfers a metered amount of chemicals to the HRSG steam/water cycle to maintain proper water quality and chemistry. By adding chemicals to the HRSG, corrosion and fouling of the heat transfer surfaces, and solids carryover to the steam distribution system are minimized.

The Sampling Panel collects and analyzes samples from the steam, condensate, feedwater, make-up, and circulating water lines. These samples are tested to obtain the proper dosages and rates for the specific chemical additions.

The Boiler Chemical Feed System consists of three discrete subsystems; coordinated phosphate, neutralizing amine, and anti-oxidant feed system.

Coordinated Phosphate

Coordinated phosphate is fed to the boiler water to control the boiler water pH and phosphate levels. By maintaining the phosphate level, any hardness is precipitated out by the phosphate. If these salts were not removed, excessive scale and deposits can form on evaporative surfaces such as the feedwater heaters, feedwater lines, and economizer.

Anti-Oxidant

Anti-oxidant is injected into the inlet to the condensate pump discharge to remove any dissolved oxygen remaining in the feedwater after the deaeration process. Dissolved oxygen is very detrimental to the boiler because dissolved oxygen has a corrosive effect on iron and steel.

Amine

Amine is injected into the inlet to the condensate pump discharge to help control the boiler water pH. Proper pH control is essential to phosphate and anti-oxidant performance.

3.6 Duct Burner System

Both heat recovery steam generators (HRSG) at the Kabirwala Power Generation Complex are equipped with a duct burner. The duct burners are installed at the inlet of the HRSGs, in the direct flowpath of the combustion turbine exhaust. The duct burners provide a means of increasing steam production within

the HRSGs through the introduction of additional thermal energy. When placed in operation, the duct burners are equipped to burn either natural gas or low Btu gas; which is combusted inside the HRSG casing. The thermal energy from the duct burner is released to the heat transfer surfaces within the HRSG, resulting in increased steam production.

The Duct Burner Systems are shown on P&IDs P34 and P35. Figure 5 is a simplified flow diagram of a duct burner arrangement, illustrating all major components and the system flowpath.

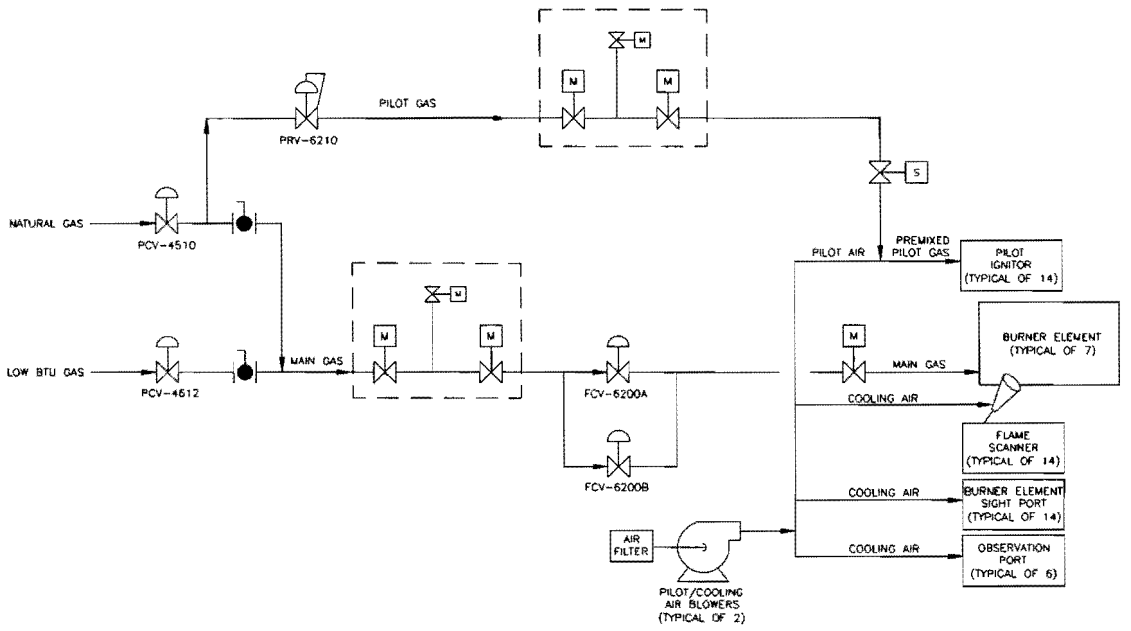

Figure 5 - Duct Burner System Simplified Diagram

As illustrated in Figure 5 above, the duct burners are each supplied two sources of fuel; natural gas and low Btu gas. Both fuel sources pass through individual pressure control valves which modulate to maintain a downstream pressure of 30 psig. Once through the pressure control valves, both fuel sources combine into a common 'main gas' header. The design of the duct burner allows the selection of only one source of fuel (natural or low Btu) to be used as main gas.

Supervisory control and monitoring of the duct burner is performed by a local Flame Safety Panel (BMS) which contains all of the controls, logics, and interlocks to ensure the burners are safely operated.

4.0 PLANT AUXILIARY SUPPORT SYSTEMS

4.1 Electrical Distribution System

The Electrical Distribution System supplies electrical power at various voltage levels for the operation of electrical equipment. Two utility 132 kV AC tie lines connect the Kabirwala facility to the local utility, WAPDA. Electricity is generated at the facility at 11.5 kV and is stepped up to 132 kVAC using transformers. Facility 'house loads' (pumps, motors, fans, etc.) are supplied power at reduced voltage levels using transformers and Motor Control Centers (MCC's) which distribute voltages of 3.3 kVAC, and 415 VAC.

Two diesel stand-by generators are connected to the 3.3 kV bus and are used for stand-by power. Each generator is supplied with meters, protective relays, voltage regulators, synchronizing relays and circuit

breakers. The stand-by generators provide electrical supply to the 3.3 kV and 415 V buses allowing equipment and system operation when electricity from the utility feed is unavailable. The stand-by generators provide enough power to support balance of plant equipment required to get one combustion gas turbine started and placed on line.

The plant electrical distribution one-line diagrams are illustrated on figures E001-E007. Additionally, Figure 6 provides a simplified illustration of the Electrical Distribution System.

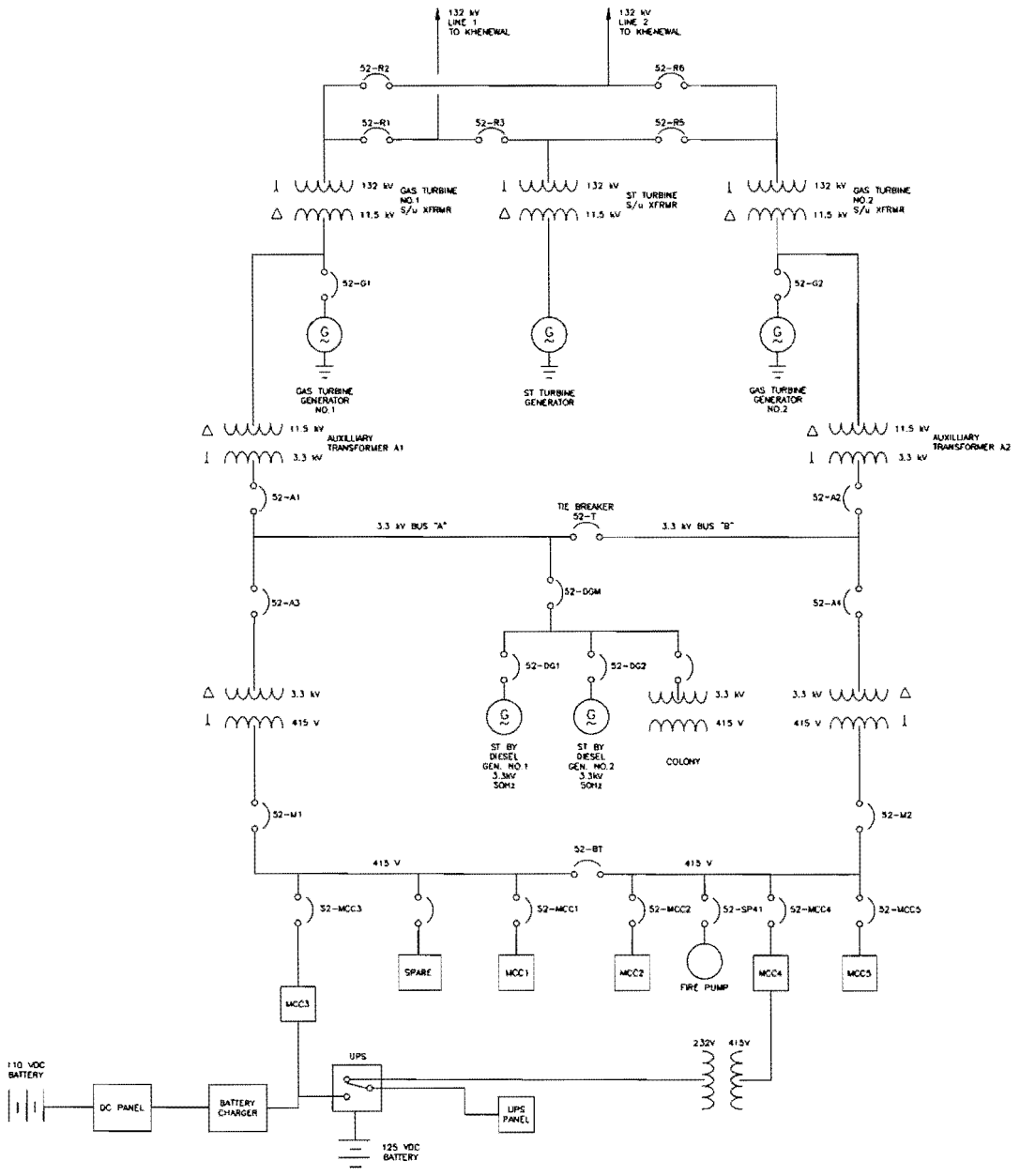

Figure 6 - Simplified Drawing of Electrical Distribution System

Power Generation 11.5 kV

Power is locally generated at 11.5 kV by a combination of up to two combustion gas turbine generators and one steam turbine generator. The steam turbine will normally be operating whenever one or both gas turbines are on line.

132 kV System

Two 132 kV tie lines, Line 1 and 2, are arranged in parallel (refer to Figure 6) and allow for individual tie line isolation with continued power generation output.

3.3 kV System

11.5 kV voltage is lowered to 3.3 kV by two 6000 kVA auxiliary transformers (A1 & A2) supplying the 3.3 kV switchgear and MCC's which feed high horsepower motor loads.

415 V System

Voltage is lowered from 3.3 kV to 415 V by two 2500 kVA auxiliary transformers (A3 & A4) supplying the 415 V switchgear and the remaining plant loads.

240/120 V System

In addition to providing power to various 415 V electrical equipment, the 415 V MCC's supply lower voltage loads through distribution panels DP-1A, DP1B, DP-2, DP-3, DP-4, DP-5 and DP-STG. 415 V is also stepped down to 240 V and 120 V through individual step down transformers supplying two 240/120 V distribution panels in the CTG control cubicles.

Uninterruptible Power System

Many critical control system and protection circuits require a continuous supply of AC power to function properly in the event of power outages. An uninterruptible power system (UPS) is fed from MCC-3. The UPS rectifies incoming 415 VAC to DC, supplying the Inverter and UPS batteries. The UPS Inverter converts DC to 230 VAC, supplying clean uninterrupted power to UPS loads connected to distribution panel UPS-1.

110 V DC System

110 V Direct Current (DC) loads are connected to DC distribution panels DC-1 and DC-2. The DC distribution panels are supplied DC power by batteries which are maintained at full charge by a system battery charger. 110 V DC is used by devices requiring control power during periods of AC power failures, such as power circuit breakers and emergency lube oil pumps. A second 110 V DC battery bank provides backup tripping poer for the 132 kV breakers. A 48 VDC battery and charger system powers the power line carrier and SCADA systems.

4.2 Stand-by Diesel Generator System

The Standby Diesel Generators, shown in Figure 6, supply a standby source of backup power to the plant when the normal source of power is lost or interrupted. The Standby Diesel Generators are designed for manual startup and are capable of supplying a limited source of 3.3 kV power to the plant electrical busses so that the main equipment can be started and brought on-line without a secondary source of power. This is strictly dependent on the alignment of the breakers on the 3.3 kV bus and the 415 V bus.

The Standby Diesel Generator consists of the following major components:

- Diesel Engine
- Generator
- Diesel Generator Control Centre

4.3 Fire Protection System

The Fire Protection System protects personnel and equipment from fire, provides an immediate source of fire water to all areas of the power plant, and provides a means of detecting and extinguishing fires in critical areas. A simplified illustration of the Fire Protection System flowpath is shown in Figure 7 and the detailed flowpath is shown on P&ID P025.

The Fire Protection System is designed to provide complete fire fighting capabilities to all areas of the plant, with respect to the fire hazards in each area. The Fire Protection System utilizes the following methods of protection:

- Sprinklers for areas around the power plant including the Admin Building, Maintenance Area, Warehouse Area, Steam Turbine Bearings and Lube Oil System.
- Hose Stations/Siamese Connections located in and around the buildings, with sufficient lengths of hose to reach immediate areas.
- Fire Hydrants (6) located around the fire loop covering the perimeter of the power plant.
- Portable fire extinguishers located throughout the plant to combat small fires.
- Fire detection alarm panel which operates in conjunction with smoke and heat detectors.

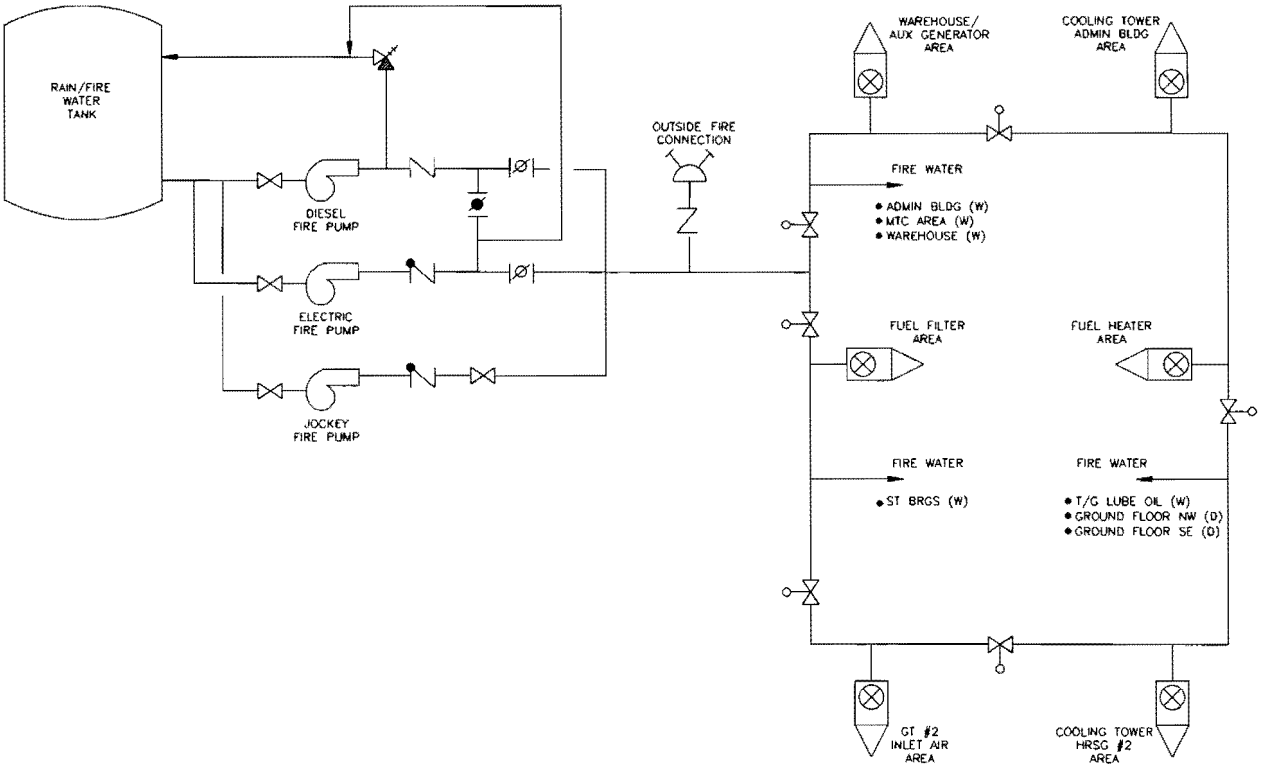

Figure 7 - Fire Protection System

At the Kabirwala Power Project, the Fire Protection System begins at the Raw / Fire Water Storage Tank. The Raw / Fire Water Storage Tank provides a stored source of fire water to three fire water pumps. Each of the fire pumps are equipped with its own individual pump controller, which monitors the firewater header pressure and controls the automatic operation of the respective pump. The jockey pump operates intermittently to maintain the firewater header pressure at 130 psig.

The underground firewater loop encompasses the major portion of the plant site and is equipped with numerous post indicating valves for isolation of the header at various points. Each post indicating valve extends above ground level and is equipped with a removable valve handle and a position indicator.

The Fire Protection System consists of the following major components:

- Raw / Fire Water Storage Tank
- Diesel Fire Water Pump
- Electric Fire Water Pump
- Jockey Pump
- Fire Suppression System
- Fire Detection System

4.4 Service and Instrument Air System

The Kabirwala Power Generation Complex Compressed Air System consists of two discrete subsystems, the Service Air System and the Instrument Air System. A simplified flow diagram is illustrated in Figure 8 and the entire piping system is illustrated on P&ID P030.

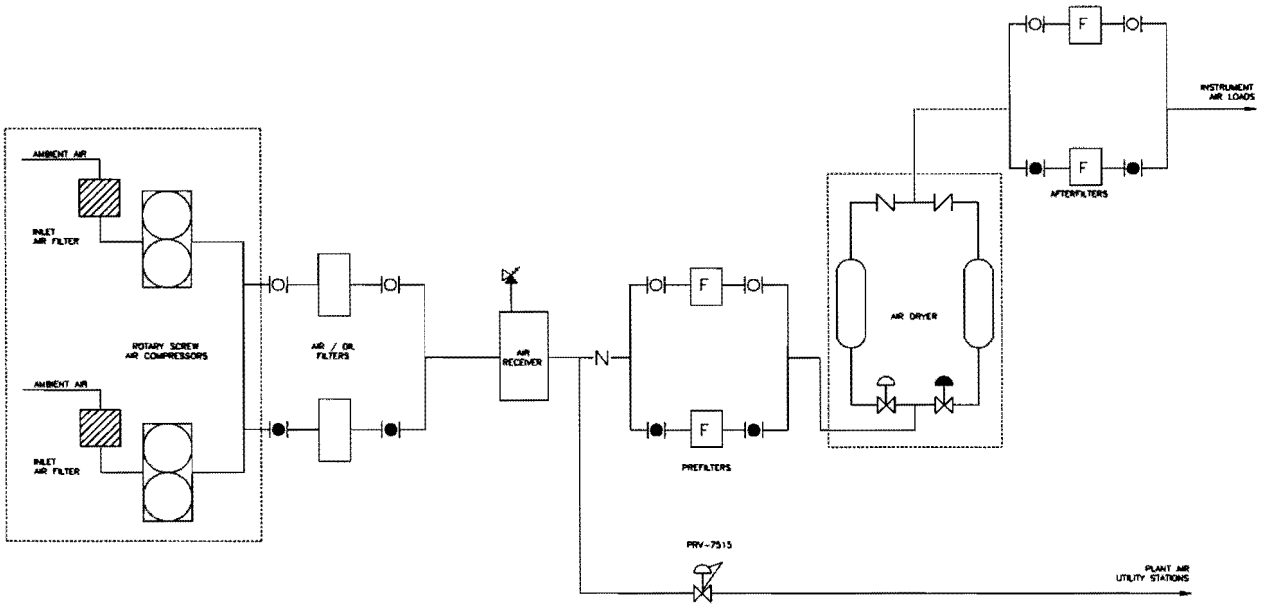

Figure 8 - Compressed Air Simplified Flowpath

The Compressed Air Systems provides both service (plant) air and instrument air to the power generation plant. Service (plant) air is provided to hose stations throughout the plant and is used for maintenance related activities such as cleaning and operating pneumatic tools. Instrument air provides the medium by which all pneumatic controllers, valve actuators, air operated instrumentation, etc., are operated.

Components served by the Instrument Air System require clean, dried air to ensure consistent and reliable operation. This Instrument Air system is critical to plant operation and is rarely, if ever, removed from service.

The Compressed Air Systems consist of the following major components:

Service Air System

- Air Compressors (2)
- Oil / Air Filters (2)
- Air Receiver

Instrument Air System

- Instrument Air Dryer

4.5 Fuel System

The Kabirwala Power Generation Complex has two distinct fuel systems; the Low BTU Gas System and the Natural Gas System. A simplified illustration of the Kabirwala Power Plant Fuel Systems is shown in Figure 9. The Low Btu / Natural Gas Systems are illustrated on P&ID P022. The Low Btu / Natural Gas supply to the Gas Turbine is illustrated on P&IDs P03 and P04. The Low Btu / Natural Gas supply to the HRSG Duct Burners is illustrated on P034 & P035.

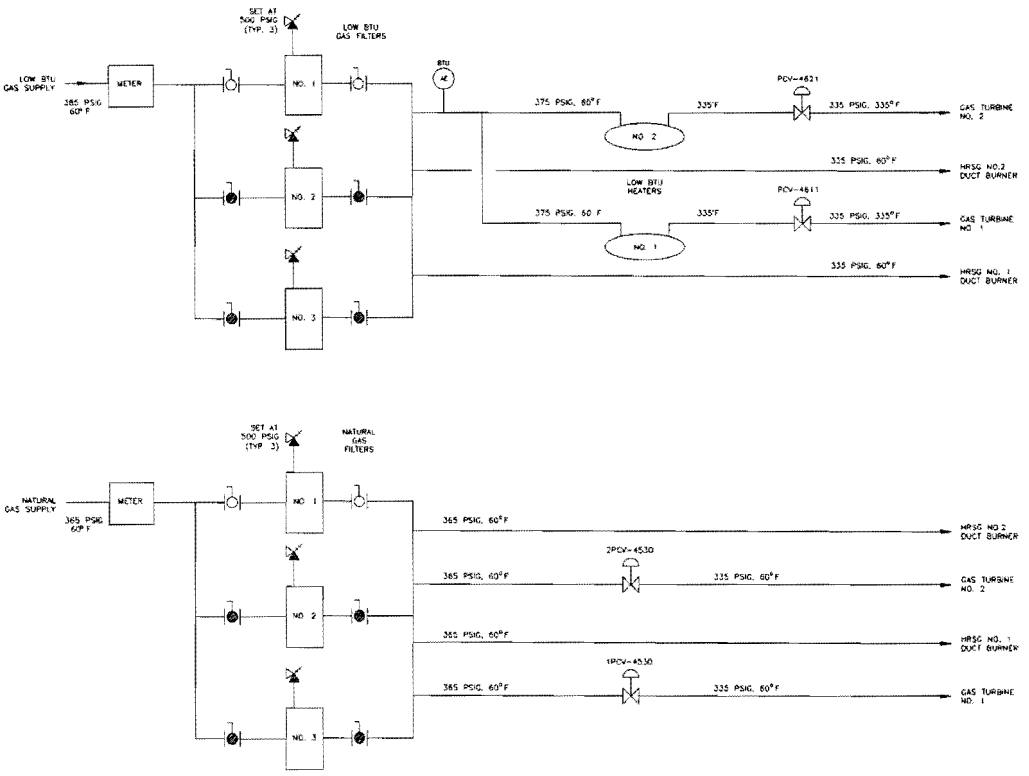

Figure 9 - Fuel Systems Simplified Flowpath

Both Low Btu Gas is supplied to the Gas Turbines and the HRSG Duct Burners as the primary fuel to meet the power and steam production demands on the plant. Natural gas is supplied to supplement these equipment as a stabilizing fuel. The Duct Burners use a burner management system and combustion control system to regulate gas to the duct burners for supplemental firing.

Low Btu Gas is supplied at 385 psig from its source to a local metering station. From the metering station, the gas header runs underground until it reaches the Low Btu Gas Filters. Three gas filters, arranged in parallel, are used to "clean" the gas before reaching the gas turbines and duct burners. "Cleaning" the gas consists of removing any moisture, particlulates, aersols, rust, scale, or other foreign matter from the gas. These could damage or impair sensative instrumentation and piping components required for safe and efficient firing. Low Btu gas for the gas turbine is preheated in the Low Btu Gas Heaters.

Natural Gas, from an outside source, approximately 5% by volume, is mixed with the low Btu gas for flame stability in the gas turbine. The primary difference is that the natural gas does not pass through a fuel gas heater and flows to the gas turbine fuel skid, virtually uninterrupted.

The Fuel Systems consists of the following major components:

- Gas Filters
- Low Btu Gas Heaters

4.6 Raw Water System

The Raw Water System provides water to the power generation complex for various water uses and as makeup to the Water / Steam System. Additionally, the Raw Water System provides the maintenance hose stations with a supply of water. The water is termed "RAW" since it is pumped from the local wells and has not been processed by filtration, chemical addition, or water treatment equipment. It is not suitable for drinking.

The Raw Water System is a critical water source that provides plant components with water for makeup and cooling. The source of water comes from three individual, deep wells. Each well is pumped using a single, electric motor driven well pump which supplies water to the plant. The majority (approximately 813 gpm) of the Raw Water flows to the cooling tower basin as makeup. The remainder flows to both the Raw / Fire Water Storage Tank and Potable Water System.

A simplified illustration of the Raw Water System is shown on the bottom half of Figure 10. A detailed piping and instrumentation diagram can be seen on drawing P&ID P023.

The actual flow path of the Raw Water System starts at the individual well water pumps. Water is pumped from the wells and combine to a common header feeding the plant. At the pump discharge, an additional underground supply header is routed to the cooling tower basin as makeup. Once at the plant, some of the water is routed to the potable water system as its primary source of water.

The Raw Water System is comprised of the following major components:

- Well Water Pumps
- Raw / Fire Water Tank
- Raw Water Pumps

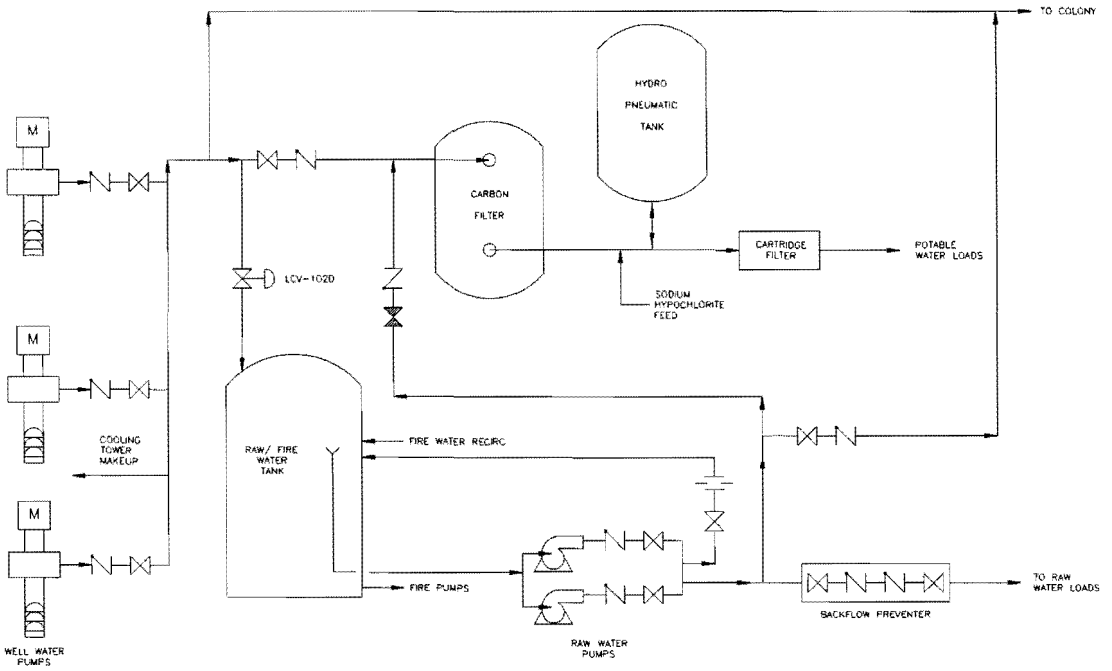

Figure 10 - Raw Water System Simplified Flow Path

4.7 Potable Water System

The Kabirwala Power Generation Complex Potable Water System treats raw water and provides treated potable water to the eyewash stations and other loads within the complex. The Potable Water System receives water from the Well Water Pumps, or as a backup source, the Raw Water System. The water is then filtered, treated, and provided to eyewash stations, lavatories, etc. for use.

A simplified illustration of the Kabirwala Power Plant Raw / Potable Water System is shown in Figure 10. The System is illustrated on P&ID P023.

The Potable Water System receives raw water from either the well water pumps or the raw water pumps. Typically, the main source of water to the Potable Water System is the Well Water System.

The Potable Water System consists of the following major components:

- Carbon Filter
- Chlorine Injection Skid
- Hydro-Pneumatic Tank
- Cartridge Filter
- Distribution System

4.8 Cooling Water System

The Kabirwala Power Generation Complex Cooling Water Systems consists of two distinct systems, the Circulating Water System and the Closed Loop Cooling Water System.

The Circulating Water System provides cooling water to the surface condenser and to the Closed Loop Cooling Water System heat exchangers. The heat absorbed by the circulating water is rejected to atmosphere in the cooling tower. Raw well water is used as the source of makeup water to the cooling tower. This makeup is due to the loss of water from blowdown, drift, and evaporation.

The Closed Loop Cooling Water System provides a continuous source of cooling water to heat exchangers of various plant components. Heat absorbed from the system loads (end-users) is rejected to the Circulating Water System by means of the plate heat exchangers. The Condensate System provides makeup to the closed loop cooling water system to compensate for water losses due to leakage.

A simplified illustration of the Kabirwala Power Plant Circulating Water System is shown in Figure 11. The Circulating Water System is illustrated on P&ID P020 and the Closed Loop Cooling Water System is illustrated on P&ID P021. The Circulating Water System supply to the split box condenser is illustrated on P&ID P017.

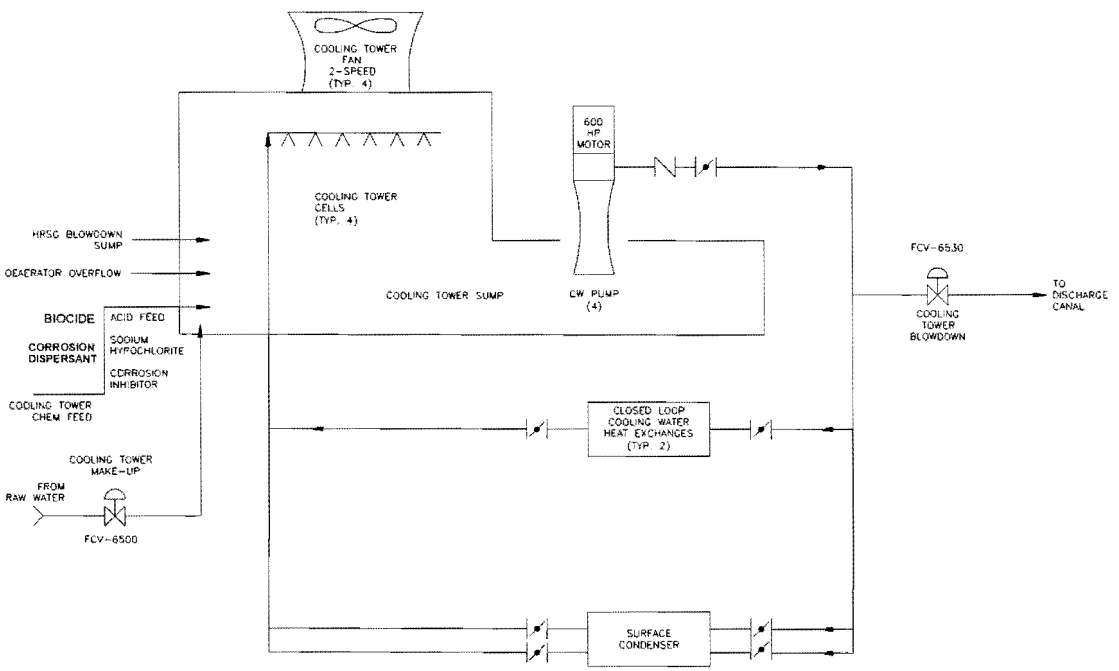

Figure 11 - Circulating Water System Simplified Flowpath

Closed Loop Cooling Water System

The Closed Loop Cooling Water System is illustrated on P021. A simplified illustration of the Closed Loop Cooling Water System is shown on Figure 12. The Closed Loop Cooling Water System is made up of a supply and a return header. Two, Closed Loop Cooling Water Pumps represent the beginning and end of the flowpath, since they take a suction on the return header and discharge into the supply header.

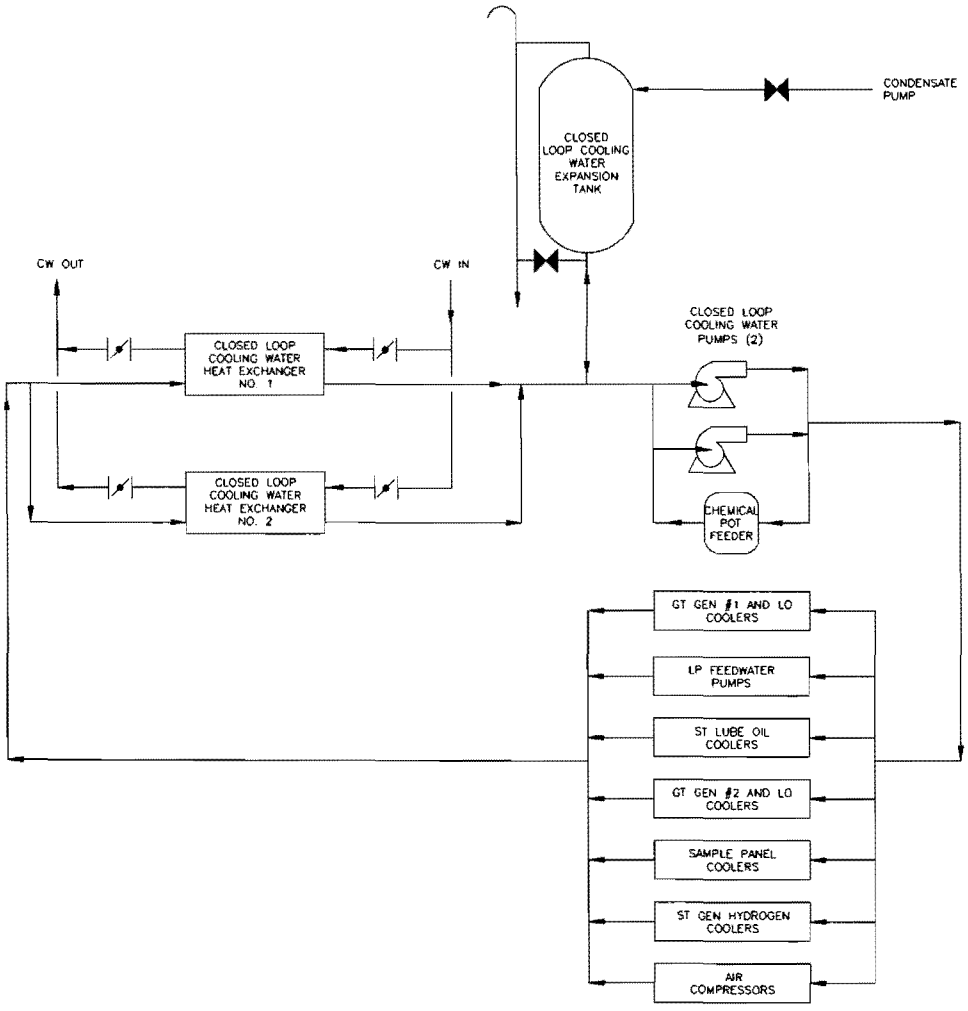

Figure 12 - Closed Loop Cooling Water System Simplified Flow Diagram

The Cooling Water Systems consist of the following major components:

Circulating Water System

- Cooling Tower
- Circ Water Pumps
- Condenser

Closed Loop Cooling Water System

- Closed Loop Heat Exchangers
- Closed Loop Cooling Water Pumps
- Expansion Tank

4.9 Cooling Tower Chemical Feed System

The purpose of the Cooling Tower Chemical Feed System is to supply chemicals to the Circ Water to maintain water quality and chemistry. By adding chemicals to the Cooling Tower, corrosion, algae, and scaling are prevented.

In water treatment, there are two separate categories of concern:

1. Inhibitors to prevent corrosion of piping and exchangers, including the condenser, cooling tower, and closed cooling water plate heat exchanger.
2. Agents to prevent growth of micro-organisms and to minimize fouling.

Corrosion inhibitors are chemicals of recently developed organics. Selection of inhibitors is determined by the analysis of the raw water makeup and materials of heat exchanger equipment.

The Cooling Tower Chemical Feed System supplies chemicals to the circulating water to prevent scaling and corrosion from occurring within the Circulating Water System components and condenser tubes. The Cooling Tower Chemical Feed System controls the growth of bacterial slime and algae that can affect surface heat transfer, impair flow distribution at the cooling tower, and cause deterioration of the cooling tower materials.

The Cooling Tower Chemical Feed System consists of five discrete subsystems; corrosion inhibitor, sodium hypochlorite, sulfuric acid, corrosion dispersant, and biocide feed subsystems:

Corrosion Inhibitor

A solution of Zinc salt, substituted Carboxylic Acid, and a Phosphoric Acid is used as a corrosion inhibitor in the Cooling Tower Chemical Feed System. This solution is provided to protect the system piping from attacks which could lead to premature failure.

Sodium Hypochlorite

Sodium hypochlorite solution (chlorine) is provided to control the bacterial slime and microorganism growth. This growth occurs when there is a combination of "warm" water and direct sunlight, as in the circ water flowing in the cooling tower. If this growth were to occur, clogging of the cooling tower and subsequently, the condenser tubes would inhibit the operation and performance of the power plant.

Sulfuric Acid

Sulfuric acid solution is provided to control the pH of the circulating water system. By controlling the pH, the effectiveness of the chemicals added to the system is increased. Acid is specifically added to the system to lower the pH to an acceptable range.

Corrosion Dispersant

Dispersant is added to the cooling tower basin to keep any solids in suspension. Dispersant helps prevent accumulations of solids within the cooling tower basin. This reduces the potential for precipitated salts from adhering to the surfaces in the cooling tower, the fill, the fan blades, and in the cooling water heat exchangers.

Biocide

Biocide is added to the cooling tower to help disinfect and control the bacteria and microorganism growth. Similar to the Sodium Hypochlorite, the biocide kills these microorganisms which tend to clog the heat transfer equipment such as the cooling tower and the closed loop cooling water heat exchangers. It is important to keep these equipment free from clogs, since the plant equipment and heat rate are directly affected.

4.10 Demineralized Water Treatment System

The Demineralizer System removes minerals, salts, and other ions from raw water. The process, called Demineralization, produces quality water that is pure and may be used as feedwater in the HRSG and condensate in the condenser.

A simplified illustration of the Kabirwala Power Plant Demineralizer System is shown in Figure 13. The Demineralizer Trains are illustrated on P&ID's P031 and P032. The Demineralized Water Storage System is illustrated on P&ID P033. The Demineralizer Neutralization System is illustrated on P&ID P033. The Demineralizer Acid Metering/Dilution System is illustrated on P&ID P027. The Demineralizer Caustic Metering/Dilution System is illustrated on P&ID P027.

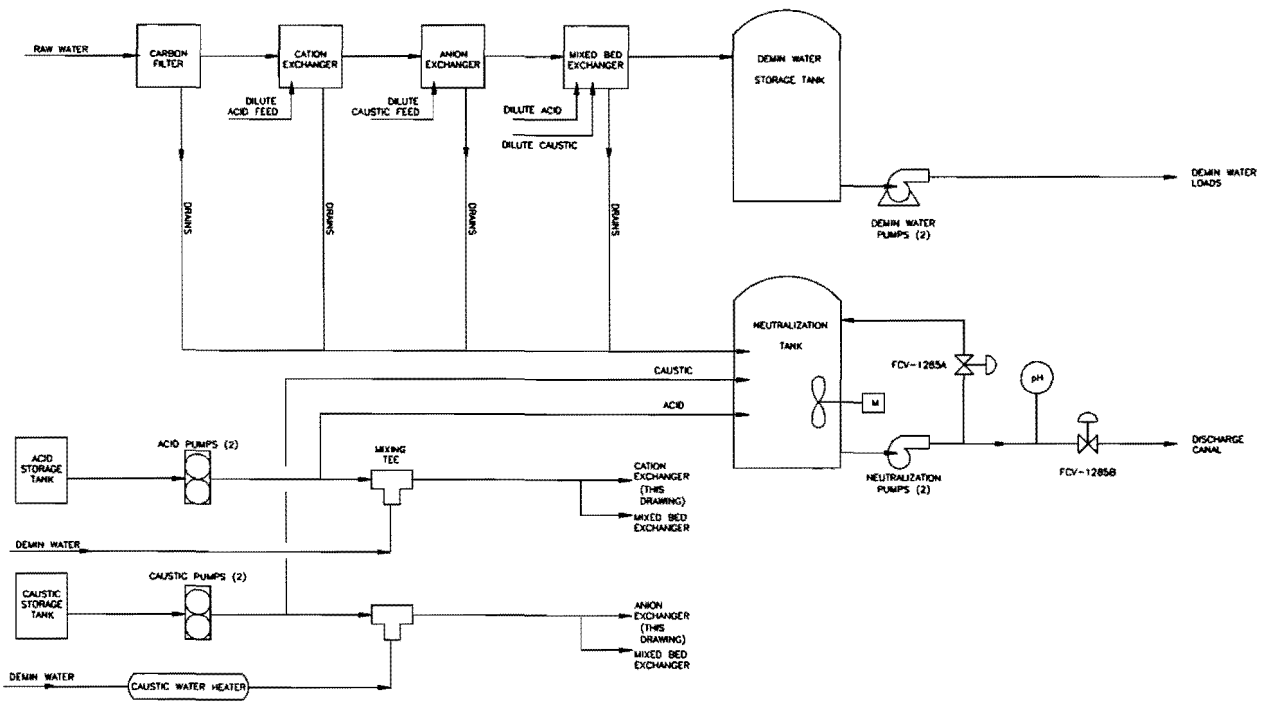

Figure 13 - Demineralized Water System Simplified Flow Path

The Demineralizer System consists of the following major subsystems:

- Two Demineralizer Trains
- One Demineralized Water Storage and Distribution System
- One Neutralization System
- One Demineralizer Acid Metering/Dilution Skid
- One Demineralizer Caustic (Base) Metering/Dilution Skid

4.11 Waste Water and Drains System

The Waste Water and Drains System provides a centralized point of collecting the waste water drains generated by the Kabirwala Power Generation Complex. These drains are sent to the canal.

The Waste Water and Drains System is shown on P&ID P024. HRSG blowdown from the blowdown tank, HRSG area floor drains, and low Btu Gas Heater drains (sump # 1 only) are collected in two independent sumps, one for each HRSG. The sump is equipped with an identical pair of sump pumps, arranged in parallel. The sump pumps transport the water out of the sump and discharge to a common header supplying the cooling tower basin as a means of cooling tower makeup. This reduces the amount of waste from the plant as well as reduces the amount of well water used as makeup. If desired, the waste water can be discharged to the canal, in lieu of sending it to the cooling tower.

Waste water from the other sumps is considered oily waste. Waste water from floor drains throughout the various parts of the plant are collected in these sumps. An oil / water separator is provided to clean the water, and retain the oil, prior to sending the water to the canal.

The Waste Water and Drains System is comprised of the following major components:

- Sumps and Sump Pumps
- Oil / Water Separator

4.12 Cranes

The Kabirwala Power Generation Complex is equipped with two overhead lifting devices, the 30- ton turbine crane (located in the turbine area) and the 5-ton electric wire rope hoist (located in the plant maintenance shop). The cranes are provided to assist in the maintenance of equipment that may require mechanical assistance in removal and re-assembly of their parts.